BONOMI GROUP

BONOMI NORTH AMERICA

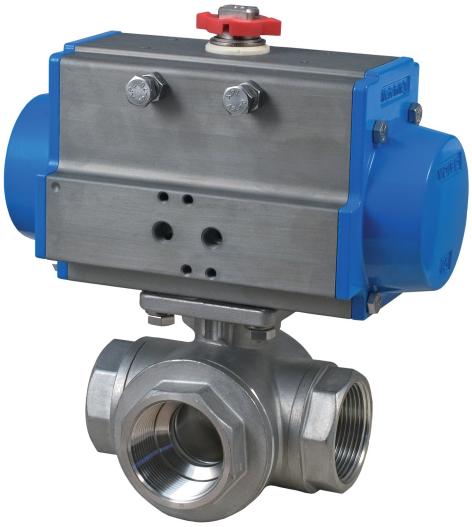

8P0143(T)

· DA-SR actuator with 3-way “T” stainless steel ball valve, full port, direct mount (Bonomi NA 956N).

- OPERATING CONDITIONS: fluid H2O - T 68°F - Actuator P 90 ÷ 100 PSI

Technical specifications

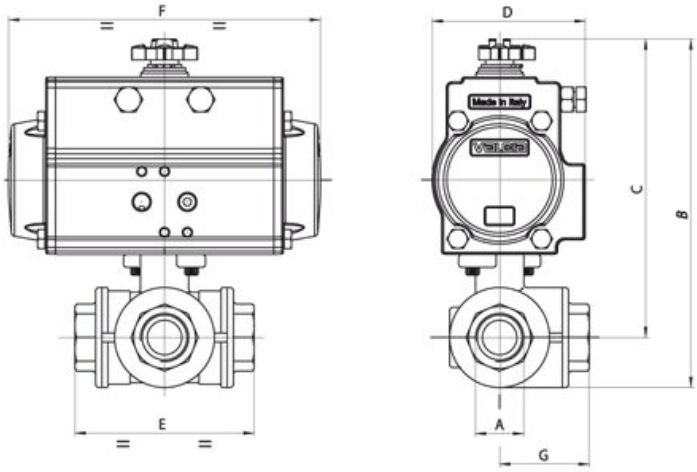

SIZE	PSI	DN - A STANDARD PORT	B	C	D	E	F	G	ACT.
1/4"	1000	-	6.23	5.45	2.8	2.83	5.55	1.41	DA 52
3/8"	1000	1/2"	6.23	5.45	2.8	2.83	5.55	1.41	DA 52
1/2"	1000	3/4"	6.56	5.65	2.8	3.26	5.55	1.63	DA 52
3/4"	1000	1"	7.2	6.1	3.17	3.89	6.46	1.94	DA 63
1"	1000	1"1/4	7.96	6.63	3.17	4.4	6.46	2.2	DA 63
1"1/4	800	1"1/2	9.17	7.64	3.72	4.92	8.27	2.46	DA 75
1"1/2	800	2"	10.47	8.59	4.17	5.86	9.47	2.93	DA 85
2"	800	-	12.2	9.84	4.84	6.85	10.83	3.42	DA 100