BONOMI GROUP

BONOMI NORTH AMERICA

# MOD. VB190

## Technical specifications

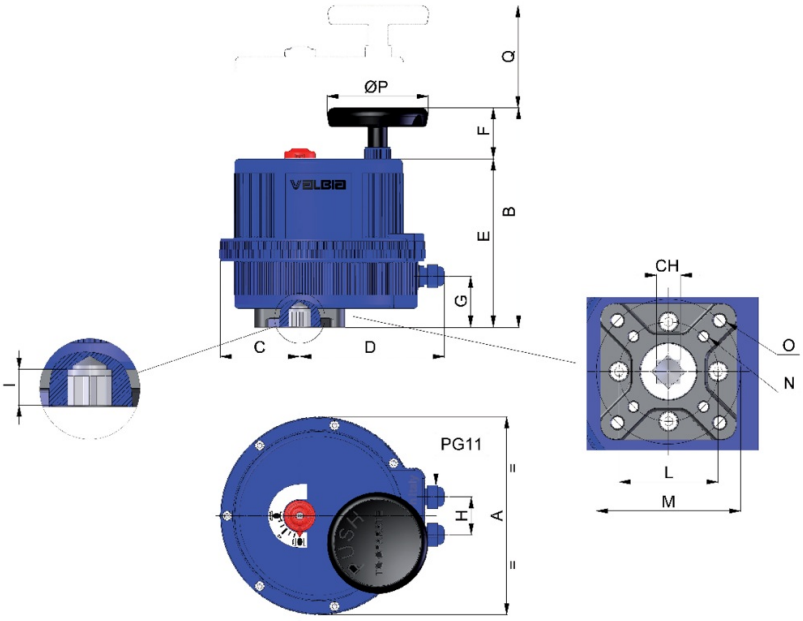


| SIZE | PATTERN ISO 5211 | CH | A | B | C | D | E | F | G | H | I | L | M | N | O | ØP | Q |
|---|---|---|---|---|---|---|---|---|---|---|---|---|---|---|---|---|---|
| VB190 | F07-F10 | 17 | 8.31 | 9.14 | 3.31 | 6.02 | 7.01 | 2.13 | 2.13 | 1.58 | 0.75 | 2.76 | 4.02 | 5/16-18 UNC 2BX0.75 | 3/8-16 UNC 2BX0.75 | 4.33 | 4.53 |

## Electrical diagrams

## ELECTRIC WIRING FROM VB030 TO VB350 12V AC/DC 50/60 Hz, 24V AC/DC 50/60 Hz, 100-240V AC 50/60 Hz

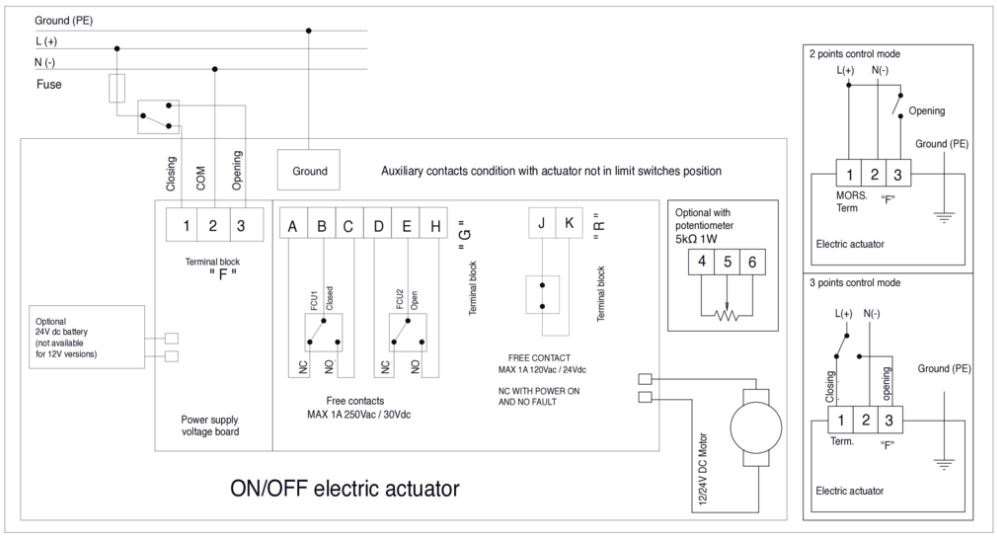


## ELECTRIC WIRING WITH POSITIONER FROM VB030 TO VB350 12V AC/DC 50/60 Hz, 24V AC/DC 50/60 Hz, 100-240V AC 50/60 Hz

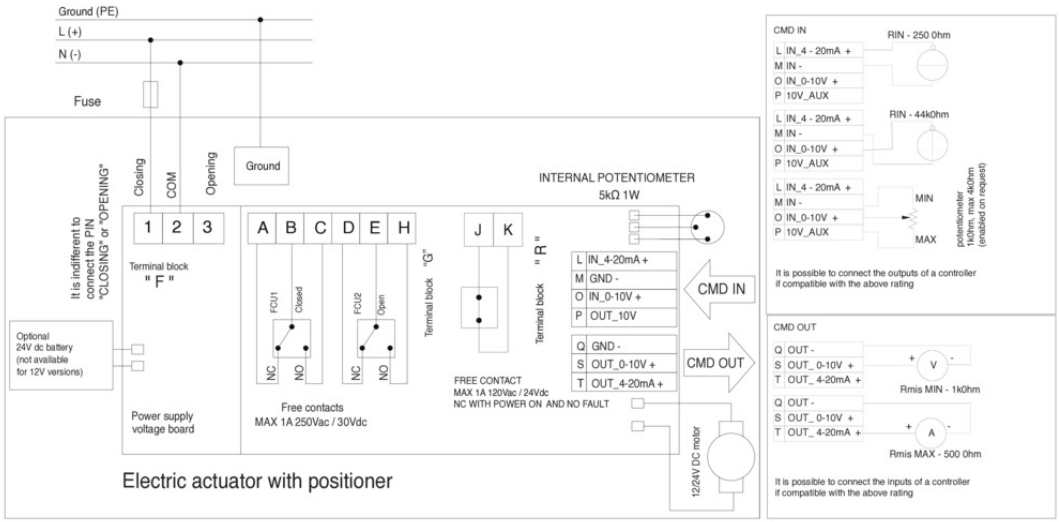


## ELECTRIC WIRING WITH MIDDLE POSITION FROM VB030 TO VB350 24V AC/DC 50/60Hz, 100-240V AC 50/60Hz

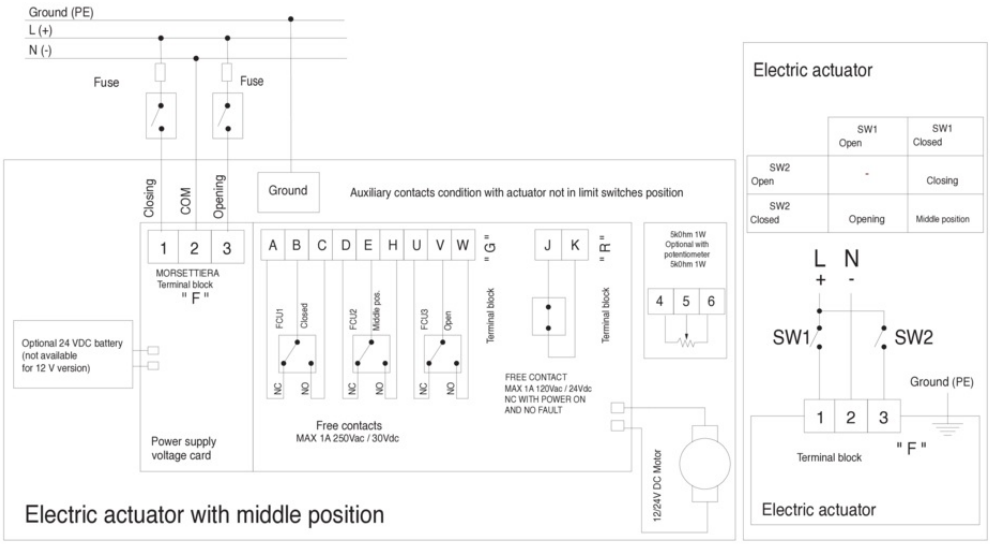

# Certifications

CSA International